ELECTRIC COVER PANEL	REVISIONS				
	ZONE	REV	DESCRIPTION	DATE	APPROVED

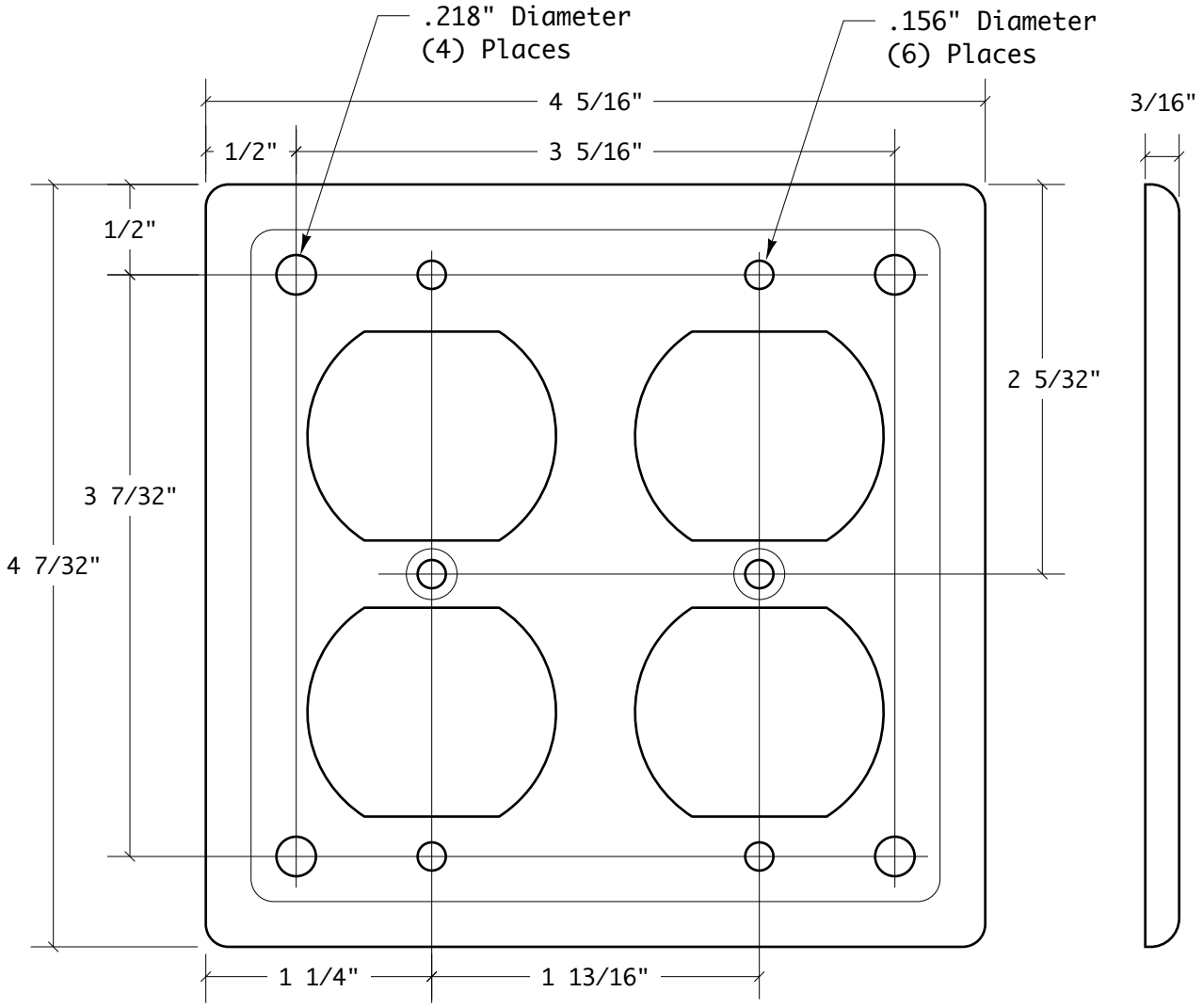

ALL DIMENSIONS ARE FOR REFERENCE ONLY. UNLESS OTHERWISE SPECIFIED ALL DIMENSIONS ARE IN INCHES.	APPROVALS	DATE	***ACE BACKSTAGE CO., INC.*** **- STAGE POCKET SYSTEMS** 24846 Avenue Rockefeller • Suite 200 • Valencia, CA 91355 Tel: 661-295-5760 • Fax: 661-295-1122 • Web: www.acebackstage.com		
	DRAWN	04/22/08			
	ENGINEER		TITLE **#DDB STEEL DOUBLE GANG ELECTRIC DUPLEX COVER PANEL, PUNCHED**		
TREATMENT	CHECKED				
FINISH	APPROVED		SIZE A	DWG NO. DDB.pdf	REV
SIMILAR TO / MARKING SYMBOL	ISSUED		SCALE: 1:1	ELECTRIC COVER PANEL	SHEET 1 OF 1